[대외비]

HD HYUNDAI ELECTRIC

Essential for Today
Potential for Tomorrow

Customer :
Project Name :
Project No. :
Revision No. :

SPECIFICATION
for
INDUCTION MOTOR

0		For Bidding			
No.	DATE	DESCRIPTION	PREPARED BY	CHECKED BY	APPROVED BY

www.hd-hyundaielectric.com

본 문서는 HD현대일렉트릭의 비밀자료로, 무단 열람·사용·복제·배포를 금합니다. 위반 시 관계 법령 및 사내 규정에 따라 조치될 수 있습니다.
※ 관계자 외 습득시 보안조직 (052-202-8098, 118@hd.com) 신고

AC INDUCTION MOTOR DATA SHEET

Catalog No.	HES40-18-324/6JM	Item No.		Rev. No.	[ ]
Project Name		Project No.		Quantity	sets

GENERAL SPECIFICATION

Frame Size		326JM
Type		PJP
Enclosure(Protection)		Totally Enclosed / IP55
Method of Cooling		IC411(FC)
Rated Frequency		60 Hz
Number of Phases		3
Insulation Class		F
Temp. Rise at full load (by resistance method)		
	at 1.0 S.F	80 deg. C
Motor Location		☐ Indoor ☐ Outdoor
Altitude		Less than 1,000 meter
Relative Humidity		Less than 80 %
Ambient Temp.		40 deg. C (Max.)
Duty Type		Continuous (S1)
Service Factor		1.15
Mounting		B35
Bearing	Type	Anti-Friction
	DE/N-DE	6313ZC3 / 6212ZC3
	Lubricant	Grease(Polyrex-EM)
External Thrust		Not applicable
Coupling Method		☑ Direct ☐ V-belt
Shaft Extension		Single
Terminal Box	Main	Cast Iron
	Aux.	No
	Location	Refer to Outline Drawing
Application		
Area classification		Hazardous
Type of Ex-Protection		Class I&II, Division 2
Applicable Standard		NEMA MG1, CSA C390

PERFORMANCE DATA

Rated Output		30 kW		40 HP
Number of Poles		4		
Rotor Type		Squirrel Cage		
Starting Method*		D.O.L		
Rated Voltage		575 V	460 V	230 V
Current	Full Load	39.0 A	48.8 A	97.6 A
	Locked-rotor**	850 %	850 %	850 %
Efficiency				
	50% Load	91.1 %		
	75% Load	93.1 %		
	100% Load	94.1 %		
Power Factor(p.u)				
	50% Load	0.670		
	75% Load	0.770		
	100% Load	0.820		
Speed at Full Load		1780 r.p.m		
Torque				
	Full Load	118.74 lb.ft		
	Locked-rotor**	170 %		
	Breakdown**	220 %		
Moment of Inertia (J)				
	Load(Max.)	218.553 lb.ft2		
	Motor	7.121 lb.ft2		
Sound Pressure Level (No-load & mean value at 1m from motor)				
		74 dB(A)		
Vibration		3.8 mm/s (peak)		
Permissible number of consecutive starts		Cold 3 times		
		Hot 2 times		
Paint	Munsell No.	4.0PB5.4/5.5(VL-451)		

ACCESSORIES

SPARE PARTS

SUBMITTAL DRAWING

Outline Dimension Drawing		\ Motor Weight(Approx.)
B35	LM-T2326C4MLV25	575 lb.

REMARK

1. Premium efficiency according to NEMA MG1
2. Inverter Duty @ 1.0 Service Factor & F Temperature rise
   -. 10:1 VT (20:1 VT at 50% load)
   -. 10:1 CT (1 hour duty, 4:1 continuous)
   -. CHP up to 1.5 times base speed, NEMA MG1 Part31
3. CSA Certification
   -. Class I, Division 2, Group A, B, C & D
   -. Class II, Division 2 Group E, F & G (Group E : up to 320Fr.)
4. Service Factor 1.15 and Temperature rise B are applicable under the condition of sine wave power.
5. Service Factor 1.25 is applicable to motors of 100HP or less with temperature rise F & Non-Hazardous.
6. Temp. code : T3C(160°C) at sine wave

Date	DSND	CHKD	CHKD	APPD
2025-09-19	S.H. LEE	I.K. KIM	R.G. KIM	S.W. KIM

[Note] Others not mentioned in this data sheet shall be in accordance with maker standard.
Above technical data are only design values and shall be guaranteed with tolerance of applicable standard.
Inspection and performance test shall be done according to maker standard, if not mentioned.
* In case of Inverter-Fed Motor, performance data is based on sine wave tests. It may be different from test data of Inverter combined motor.
** Data is based on rated voltage & frequency and is expressed as a percentage of full-load value.

본 문서는 HD현대일렉트릭의 비밀자료로, 무단 열람·사용·복제·배포를 금합니다. 위반 시 관계 법령 및 사내 규정에 따라 조치될 수 있습니다.
※ 관계자 외 습득시 보안조직 (052-202-8098, 118@hd.com) 신고

HD HYUNDAI ELECTRIC

본 도면은 HD현대일렉트릭(주) 재산이며
허가없이 복사할 수 없음 (취급유의)

THIS DRAWING IS PROPRIETARY TO HYUNDAI ELECTRIC. NO PART OF THIS DRAWING MAYBE REPRODUCED WITHOUT THE PERMISSION OF HYUNDAI ELECTRIC.

REV	DATE	CONTENTS	REVD BY	CHKD BY	CHKD BY	APPD BY

▣ MAIN NAMEPLATE

4.72

2.36

CROWN TRITON G2
Premium Efficiency AC 3 Phase Motor

CC038A

40HP	4P	230/460V		Cat. No.	HES40-18-324/6JM		
Model	HLS326PR235V			INS. Class	F HD-F1	Amps	97.6/48.8A
Type	HLS	Duty	CONT	Code K	Amb. 40°C	Hertz	60Hz
Frame	326JM	Encl.	TEFC	S.F. 1.15	RPM 1780	NEMA Nom. Eff.	94.1%
Bearing	Drive 6313ZC3			S.F.1.25 (When 100HP or less, Temp Rise F & Non-Hazardous)		3/4 Eff.	93.1%
	Opp. 6212ZC3			S.F.1.00 (10:1 C.T., 20:1 V.T., NEMA-MG1 Part31)		NEMA Design	B Torque
Usable at	50Hz 40HP 380V 66.4A 1480rpm S.F.: 1.0 Eff.: 93.0% Code: J						
	50Hz 40HP 400/415V 64.4/63.5A 1480/1485rpm S.F.: 1.0 Eff.: 93.0/93.0% Code: K/L						

CSA Certified for	Model -		Type PJP	Temp. Code (sine wave)	Frame	140~320FR	360~400FR	440FR
	CLASS I, Div. 2, Gr. A, B, C & D CLASS I, Zone 2, Gr. IIA, IIB, & IIC	CLASS II, Div. 2 Gr. E, F & G (Gr. E : Up to 320FR)			Amb. 40°C	T3C (160°C)	T3B (165°C)	T3A (180°C)
					Amb. 55°C	T3A (180°C)	T3A (180°C)	T3 (200°C)

No.	-	Date -	Weight 575 lb

4M-137666
MARINE DUTY IEEE45

Made in Vietnam H4
Designed By HYUNDAI, Korea

HD HYUNDAI ELECTRIC

▣ WIRING DIAGRAM

D.O.L (INVERTER & SOFT STARTER)	WYE-DELTA (Y-D)

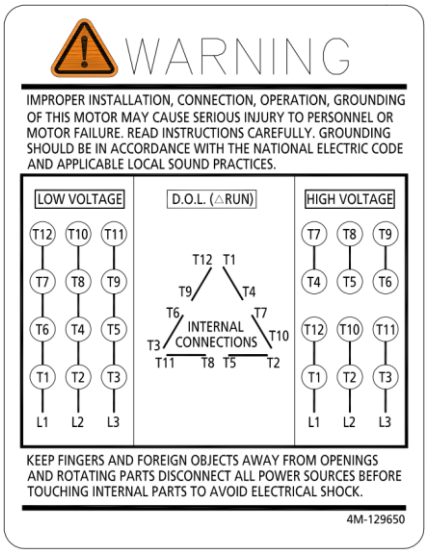

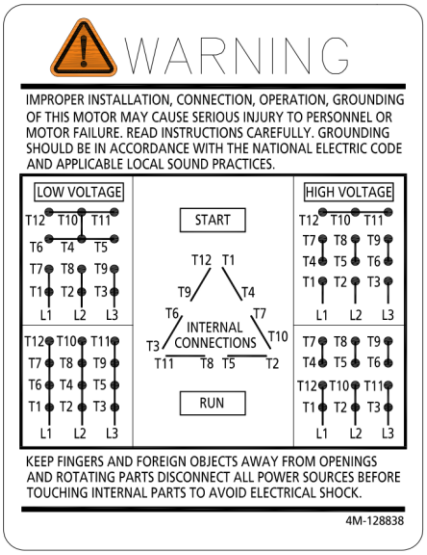

APPD BY	S.Y.KIM	UNIT	INCH	SUBJECT	CSA Class I, Division2 Severe Duty (HES, JM/JP, 254-326)	DWG SIZE A4 (1:1)
CHKD BY	I.K.KIM	SCALE	NONE	TITLE	NAMEPLATE DRAWING	
CHKD BY	R.G.KIM	PROJEC'N	3rd Angle			
DSND BY	S.H.LEE	DATE	2024.06.07			
HD HYUNDAI ELECTRIC				REF. NO	4M-137666 / 4M-129650	Sheet No. of
				DWG NO	NP-HES40-18-324/6JM	Revision No. 0

본 문서는 HD현대일렉트릭의 비밀자료로, 무단 열람·사용·복제·배포를 금합니다. 위반 시 관계 법령 및 사내 규정에 따라 조치될 수 있습니다.
※ 관계자 외 습득시 보안조직 (052-202-8098, 118@hd.com) 신고

[대외비]

HYUNDAI ELECTRIC	PERFORMANCE CURVE	CURVE NO.
		PC-HES40-18-324/6JM

Type :	PJP	
Full Load Torque :	118.74	lb.ft
Load moment of Inertia (J) :	218.553	lb.ft2
Motor moment of Inertia (J) :	7.121	lb.ft2

30kW 40HP 4 P 60 Hz

Speed at Full Load : 1780 RPM

Rated Voltage	575V	460V	230V
Full Load Current	39.0A	48.8A	97.6A

SPEED VS TORQUE & CURRENT CURVE

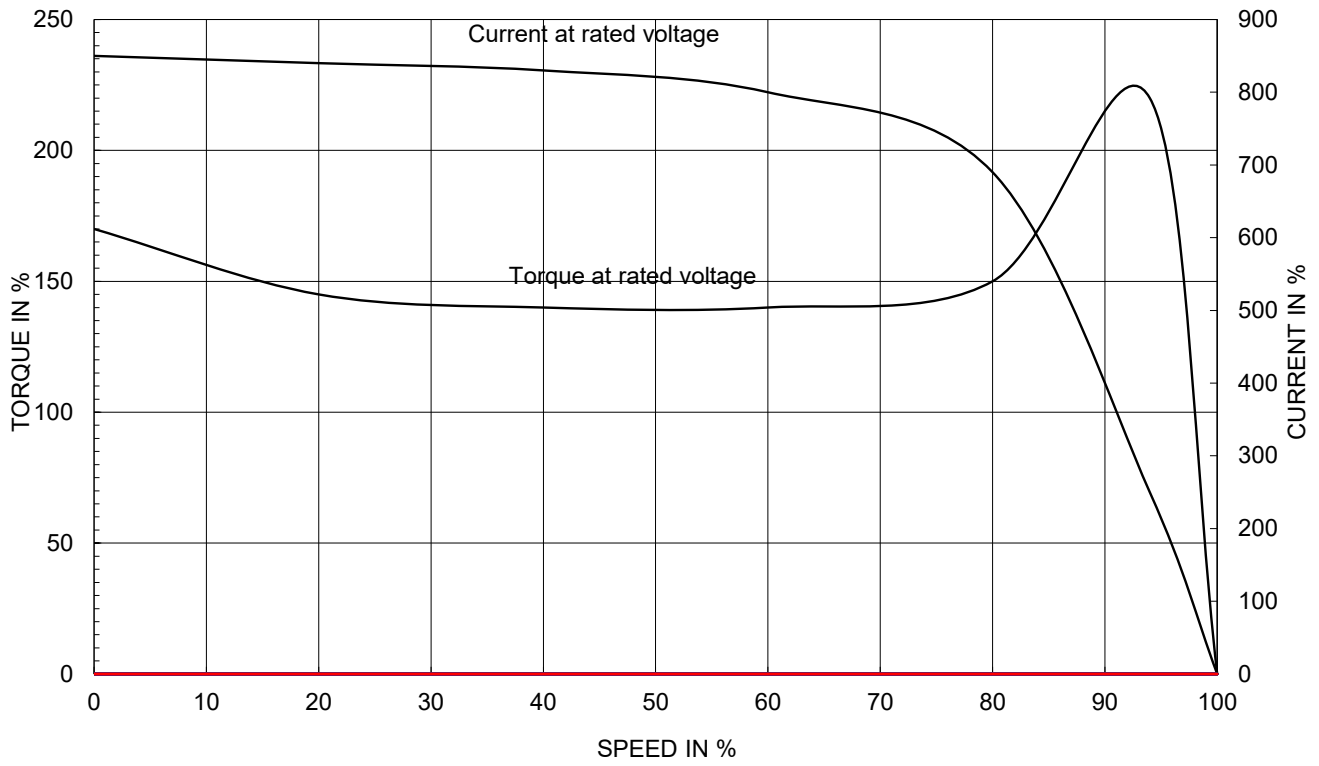

OUTPUT VS EFF., P.F & CURRENT CURVE

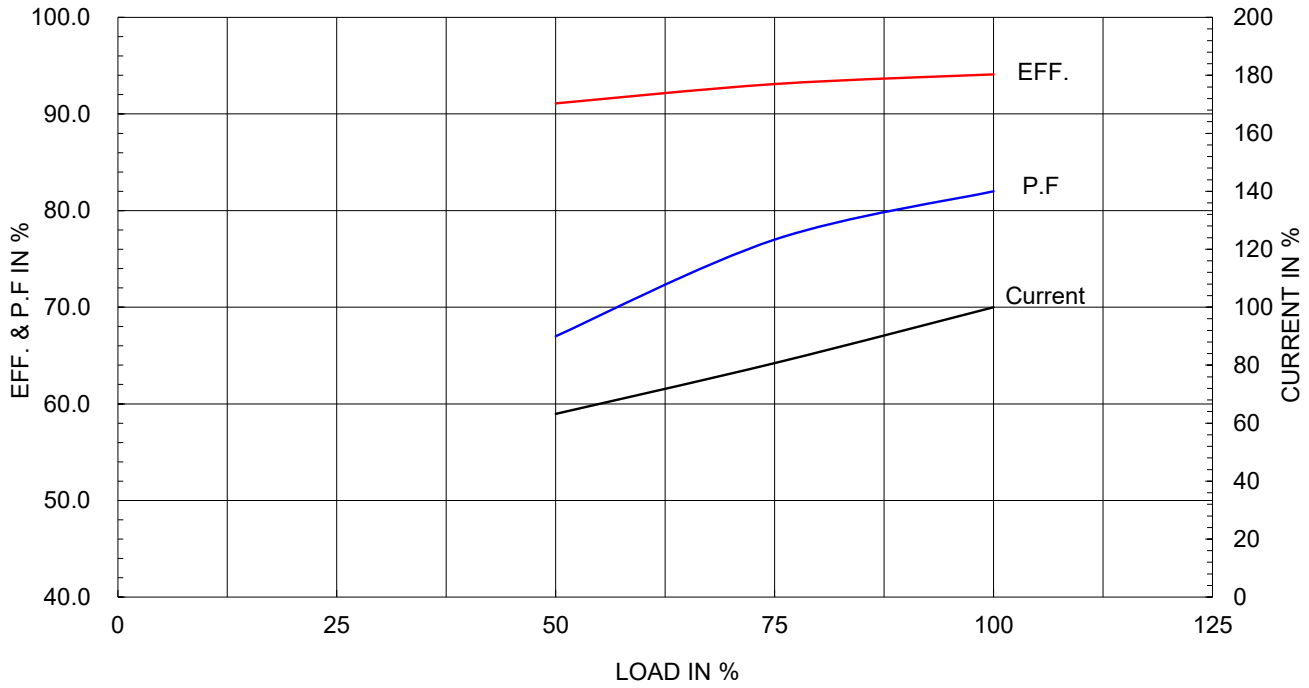

RM-P251-133

본 문서는 HD현대일렉트릭의 비밀자료로, 무단 열람·사용·복제·배포를 금합니다. 위반 시 관계 법령에 의거 민·형사상 책임을 지게 됩니다.
※ 관계자 외 습득시 보안조직 (052-202-8098, 118@hd.com) 신고

A4(210mm x 297mm)

[대외비]

REV	DATE	CONTENTS	REVD BY	CHKD BY	CHKD BY	APPD BY

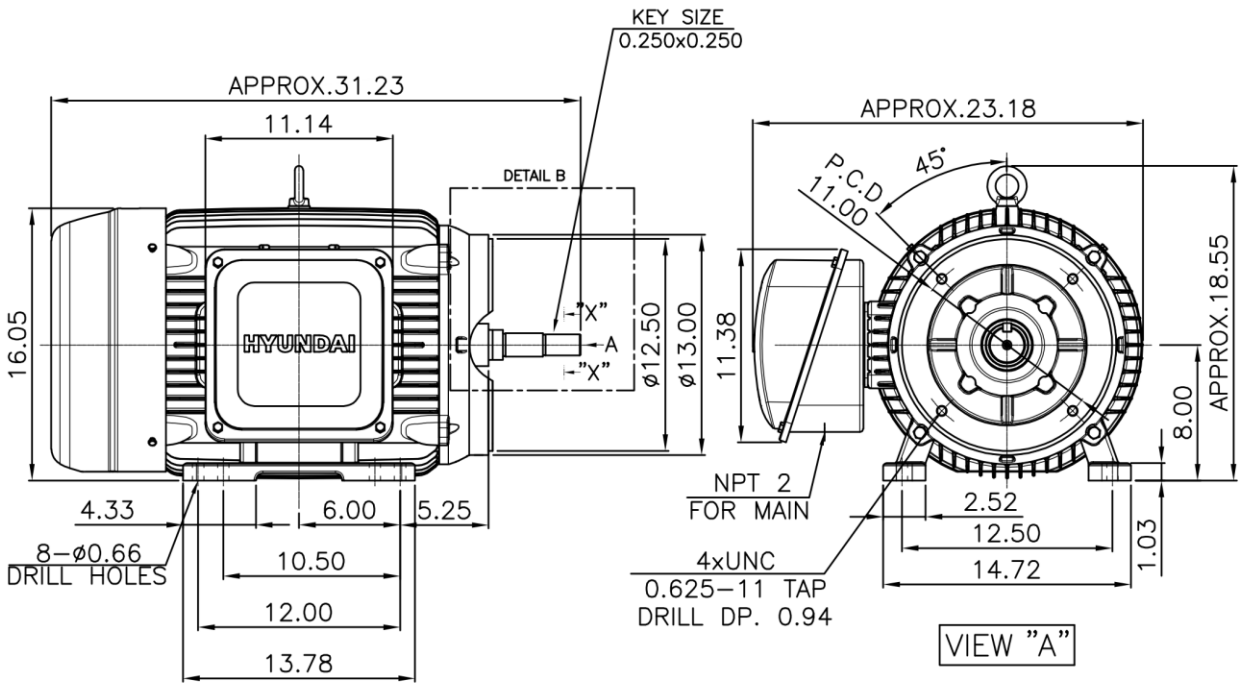

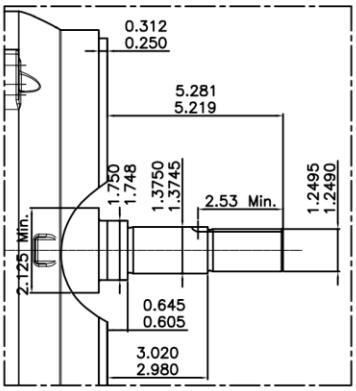

DETAIL – B

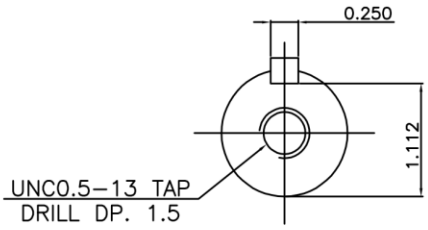

SECTION "X-X"
SCALE 5/9

NOTE

[TOLERANCE]

1. CENTER HEIGHT : +0.00inch – 0.03inch
2. SHAFT DIAMETER : +0.000inch – 0.001inch
3. KEYWAY DEPTH : +0.000inch – 0.015inch

APPD BY	S.W.KIM	UNIT	INCH
CHKD BY	R.G.KIM	SCALE	1/11
CHKD BY		PROJEC'N	3rd Angle
DSND BY	S.H.LEE	DATE	2025-01-14

SUBJECT: NEMA 324/6TC (JM) (Dual hole)

DWG SIZE: A4 (1:11)

TITLE: OUTLINE

REF. NO:

Sheet No. of

DWG NO: LM-T2326C4MLV25

Revision No. 1

HD HYUNDAI ELECTRIC

THIS DRAWING IS PROPRIETARY TO HYUNDAI ELECTRIC. NO PART OF THIS DRAWING MAYBE REPRODUCED WITHOUT THE PERMISSION OF HYUNDAI ELECTRIC.

본 문서는 HD현대일렉트릭의 비밀자료로, 무단 열람·사용·복제·배포를 금합니다. 위반 시 관계 법령 및 사내 규정에 따라 조치될 수 있습니다.
※ 관계자 외 습득시 보안조직 (052-202-8098, 118@hd.com) 신고

Cls. I&II, Div. 2
IEEE 841

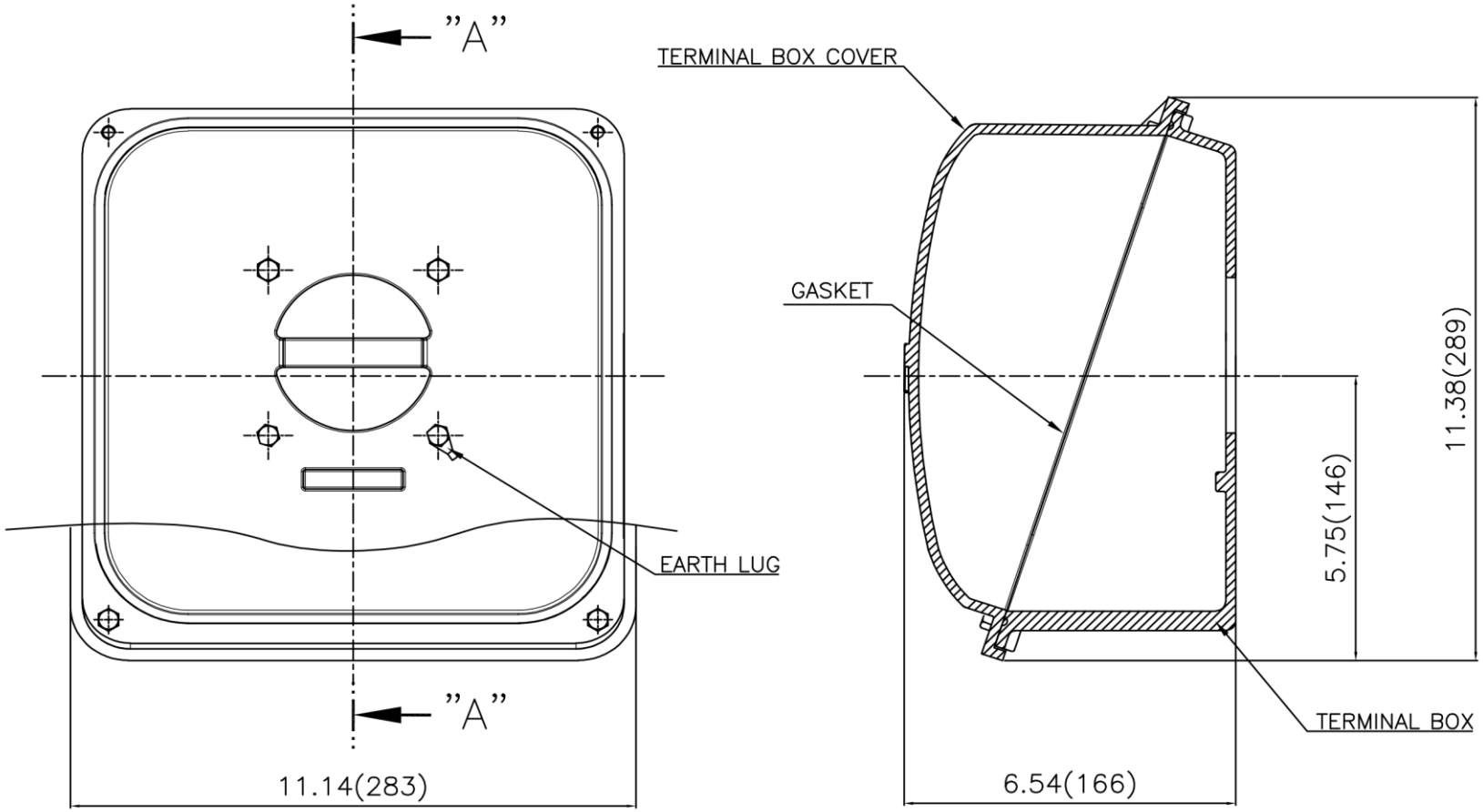

SEC. "A"–"A"

▽	50S
▽▽	12.5S
▽▽▽	3.2S
▽▽▽▽	0.4S

REV	DATE	CONTENTS	REVD BY	CHKD BY	CHKD BY	APPD BY

일반가공공차		일반제관공차	
1–4	±0.1	6–30	±0.5
4–18	±0.2	30–120	±0.8
18–63	±0.3	120–315	±1.2
63–250	±0.5	315–1000	±2.0
250–	±0.8	1000–	±3.0

Q'TY	DESCRIPTION	MATERIAL	DIMENSION	WEIGHT	PART NO.	REMARK	NO.

APPD BY	S.Y.KIM	UNIT	inch(mm)
CHKD BY		SCALE	1/2.5
CHKD BY	R.G.KIM	PROJEC'N	3rd Angle
DSND BY	배솔희	DATE	2023–10–19

HD HYUNDAI ELECTRIC

SUBJECT	FR. 320 (CAST IRON)	DWG SIZE	A3 (1:2.5)
TITLE	TERMINAL BOX ASS'Y		
REF. NO		Sheet No.	of
DWG NO	3M–248459	Revision No.	0

HD HYUNDAI ELECTRIC

본 도면은 HD현대일렉트릭(주) 재산이며 허가없이 복사할 수 없음 (취급유의)

THIS DRAWING IS PROPRIETARY TO HYUNDAI ELECTRIC. NO PART OF THIS DRAWING MAYBE REPRODUCED WITHOUT THE PERMISSION OF HYUNDAI ELECTRIC.

본 문서는 HD현대일렉트릭의 비밀자료로, 무단 열람·사용·복제·배포를 금합니다. 위반 시 관계 법령 및 사내 규정에 따라 조치될 수 있습니다.
※ 관계자 외 습득시 보안조직 (052-202-8098, 118@hd.com) 신고