[대외비]

HD HYUNDAI ELECTRIC

Essential for Today
Potential for Tomorrow

Customer :
Project Name :
Project No. :
Revision No. :

SPECIFICATION
for
INDUCTION MOTOR

0		For Bidding			
No.	DATE	DESCRIPTION	PREPARED BY	CHECKED BY	APPROVED BY

www.hd-hyundaielectric.com

본 문서는 HD현대일렉트릭의 비밀자료로, 무단 열람·사용·복제·배포를 금합니다. 위반 시 관계 법령 및 사내 규정에 따라 조치될 수 있습니다.
※ 관계자 외 습득시 보안조직 (052-202-8098, 118@hd.com) 신고

AC INDUCTION MOTOR DATA SHEET

Catalog No.	HES15-36-213/5JP	Item No.		Rev. No.	[ ]
Project Name		Project No.		Quantity	sets

GENERAL SPECIFICATION

Frame Size		215JP
Type		PJP
Enclosure(Protection)		Totally Enclosed / IP55
Method of Cooling		IC411(FC)
Rated Frequency		60 Hz
Number of Phases		3
Insulation Class		F
Temp. Rise at full load (by resistance method)		
	at 1.0 S.F	95 deg. C
Motor Location		☐ Indoor ☐ Outdoor
Altitude		Less than 1,000 meter
Relative Humidity		Less than 80 %
Ambient Temp.		40 deg. C (Max.)
Duty Type		Continuous (S1)
Service Factor		1.15
Mounting		B35
Bearing	Type	Anti-Friction
	DE/N-DE	6309ZZC3 / 6208ZZC3
	Lubricant	Grease(Polyrex-EM)
External Thrust		Not applicable
Coupling Method		☑ Direct ☐ V-belt
Shaft Extension		Single
Terminal Box	Main	Cast Iron
	Aux.	No
	Location	Refer to Outline Drawing
Application		
Area classification		Hazardous
Type of Ex-Protection		Class I&II, Division 2
Applicable Standard		NEMA MG1, CSA C390

PERFORMANCE DATA

Rated Output		11 kW		15 HP
Number of Poles		2		
Rotor Type		Squirrel Cage		
Starting Method*		D.O.L		
Rated Voltage		575 V	460 V	230 V
Current	Full Load	15.2 A	19.0 A	37.9 A
	Locked-rotor**	700 %	700 %	700 %
Efficiency				
	50% Load	88.0 %		
	75% Load	90.0 %		
	100% Load	91.0 %		
Power Factor(p.u)				
	50% Load	0.650		
	75% Load	0.750		
	100% Load	0.800		
Speed at Full Load		3500 r.p.m		
Torque				
	Full Load	22.14 lb.ft		
	Locked-rotor**	150 %		
	Breakdown**	240 %		
Moment of Inertia (J)				
	Load(Max.)	11.159 lb.ft2		
	Motor	0.451 lb.ft2		
Sound Pressure Level (No-load & mean value at 1m from motor)				
		73 dB(A)		
Vibration		3.8 mm/s (peak)		
Permissible number of consecutive starts		Cold 3 times		
		Hot 2 times		
Paint	Munsell No.	4.0PB5.4/5.5(VL-451)		

ACCESSORIES

SPARE PARTS

SUBMITTAL DRAWING

Outline Dimension Drawing		\ Motor Weight(Approx.)	
	B35	LM-T2215C4JLV25	190 lb.

REMARK

1. Premium efficiency according to NEMA MG1
2. Inverter Duty @ 1.0 Service Factor & F Temperature rise
   -. 10:1 VT (20:1 VT at 50% load)
   -. 10:1 CT
   -. CHP up to 1.5 times base speed, NEMA MG1 Part31
3. CSA Certification
   -. Class I, Division 2, Group A, B, C & D
   -. Class II, Division 2 Group E, F & G (Group E : up to 320Fr.)
4. Service Factor 1.15 and Temperature rise B are applicable under the condition of sine wave power.
5. Service Factor 1.25 is applicable to motors of 100HP or less with temperature rise F & Non-Hazardous.
6. Temp. code : T3C(160°C) at sine wave

Date	DSND	CHKD	CHKD	APPD
2025-09-19	S.H. LEE	I.K. KIM	R.G. KIM	S.W. KIM

[Note] Others not mentioned in this data sheet shall be in accordance with maker standard.
Above technical data are only design values and shall be guaranteed with tolerance of applicable standard.
Inspection and performance test shall be done according to maker standard, if not mentioned.
* In case of Inverter-Fed Motor, performance data is based on sine wave tests. It may be different from test data of Inverter combined motor.
** Data is based on rated voltage & frequency and is expressed as a percentage of full-load value.

본 문서는 HD현대일렉트릭의 비밀자료로, 무단 열람·사용·복제·배포를 금합니다. 위반 시 관계 법령 및 사내 규정에 따라 조치될 수 있습니다.
※ 관계자 외 습득시 보안조직 (052-202-8098, 118@hd.com) 신고

HD HYUNDAI ELECTRIC

본 도면은 HD현대일렉트릭(주) 재산이며
허가없이 복사할 수 없음 (취급유의)

THIS DRAWING IS PROPRIETARY TO HYUNDAI ELECTRIC. NO PART OF THIS DRAWING MAYBE REPRODUCED WITHOUT THE PERMISSION OF HYUNDAI ELECTRIC.

REV	DATE	CONTENTS	REVD BY	CHKD BY	CHKD BY	APPD BY

▣ MAIN NAMEPLATE

3.94

1.57

CROWN TRITON G2 Premium Efficiency AC 3 Phase Motor — Cat. No. HES15-36-213/5JP

15HP	2P	230/460V	Amps 37.9/19.0A	Type HLS		Amb. 40°C	
Frame 215JP	Duty CONT		Encl. TEFC	Model HLS215PR135V		NEMA Nom. Eff. 91.0%	
RPM 3500	Hertz 60Hz		S.F. 1.15	INS. Class F HD-F1		3/4 Eff. 90.0%	
Bearing	Drive 6309ZZC3		S.F.1.25 (When 100HP or less,Temp Rise F & Non-Hazardous)			NEMA Design B Torque	
	Opp. 6208ZZC3		S.F.1.00 (10:1 C.T., 20:1 V.T., NEMA-MG1 Part31)			Code H	
Usable at	50Hz 10HP 380V 14.9A 2920rpm S.F.: 1.15 Eff.: 90.1% Code: H						
	50Hz 10HP 400/415V 14.3/14.1A 2930/2935rpm S.F.: 1.15 Eff.: 90.1/90.1% Code: J/K						
CSA Certified for	Model -			Type PJP	Temp. Code (Sine Wave)	Frame 140~320FR	
	CLASS I, Div. 2, Gr. A, B, C & D CLASS I, Zone 2, Gr. IIA, IIB & IIC	CLASS II, Div. 2, Gr. E, F & G (Gr. E : up to 320FR)				Amb.40°C T3C (160°C) Amb.55°C T3A (180°C)	
No. -		Date -		Weight 190 lb			

4M-137664 **MARINE DUTY IEEE45** — Made in Vietnam H4 Designed By HYUNDAI, Korea — HD HYUNDAI ELECTRIC

CC038A

▣ WIRING DIAGRAM

D.O.L (INVERTER & SOFT STARTER)	WYE-DELTA (Y-D)
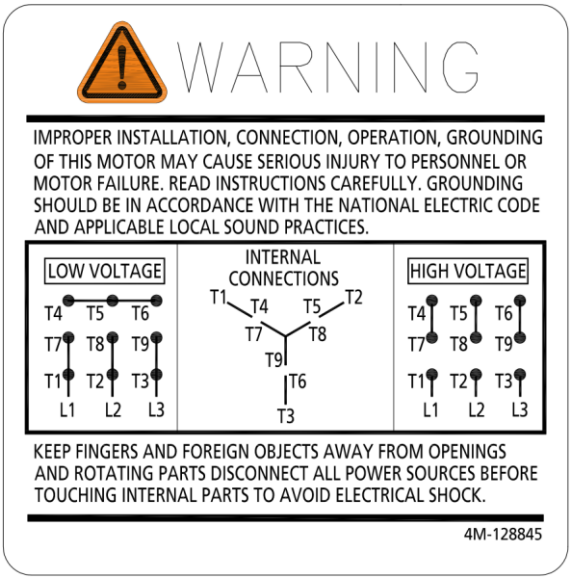	N/A

APPD BY	S.Y.KIM	UNIT	INCH
CHKD BY	I.K.KIM	SCALE	NONE
CHKD BY	R.G.KIM	PROJEC'N	3rd Angle
DSND BY	S.H.LEE	DATE	2024.06.07

HD HYUNDAI ELECTRIC

SUBJECT	CSA Class I, Division2 Severe Duty (HES, JM/JP, 143-215)	DWG SIZE A4 (1:1)
TITLE	NAMEPLATE DRAWING	
REF. NO	4M-137664 / 4M-128845	Sheet No. of
DWG NO	NP-HES15-36-213/5JP	Revision No. 0

본 문서는 HD현대일렉트릭의 비밀자료로, 무단 열람·사용·복제·배포를 금합니다. 위반 시 관계 법령 및 사내 규정에 따라 조치될 수 있습니다.
※ 관계자 외 습득시 보안조직 (052-202-8098, 118@hd.com) 신고

[대외비]

HYUNDAI ELECTRIC	PERFORMANCE CURVE	CURVE NO.
		PC-HES15-36-213/5JP

Type :	PJP	
Full Load Torque :	22.14	lb.ft
Load moment of Inertia (J) :	11.159	lb.ft2
Motor moment of Inertia (J) :	0.451	lb.ft2

11kW 15HP 2 P 60 Hz

Speed at Full Load : 3500 RPM

Rated Voltage	575V	460V	230V
Full Load Current	15.2A	19.0A	37.9A

SPEED VS TORQUE & CURRENT CURVE

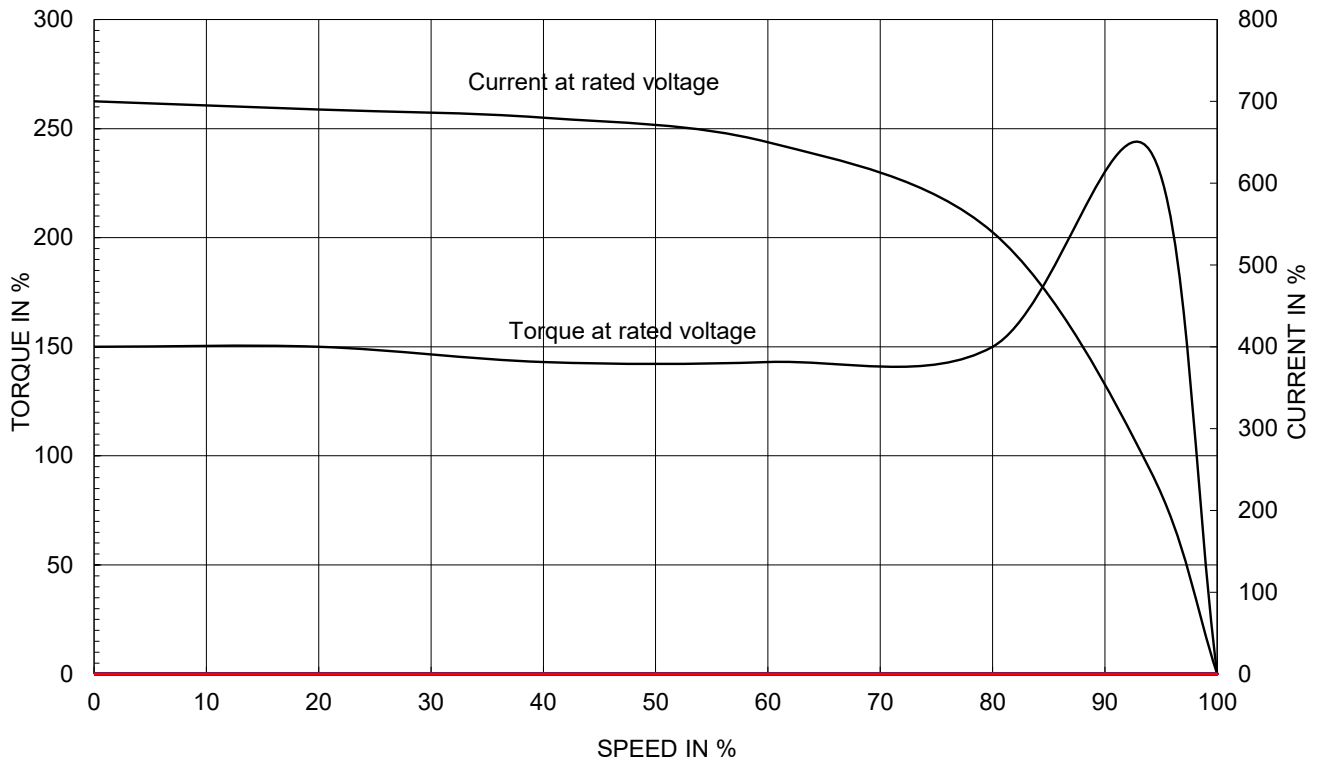

OUTPUT VS EFF., P.F & CURRENT CURVE

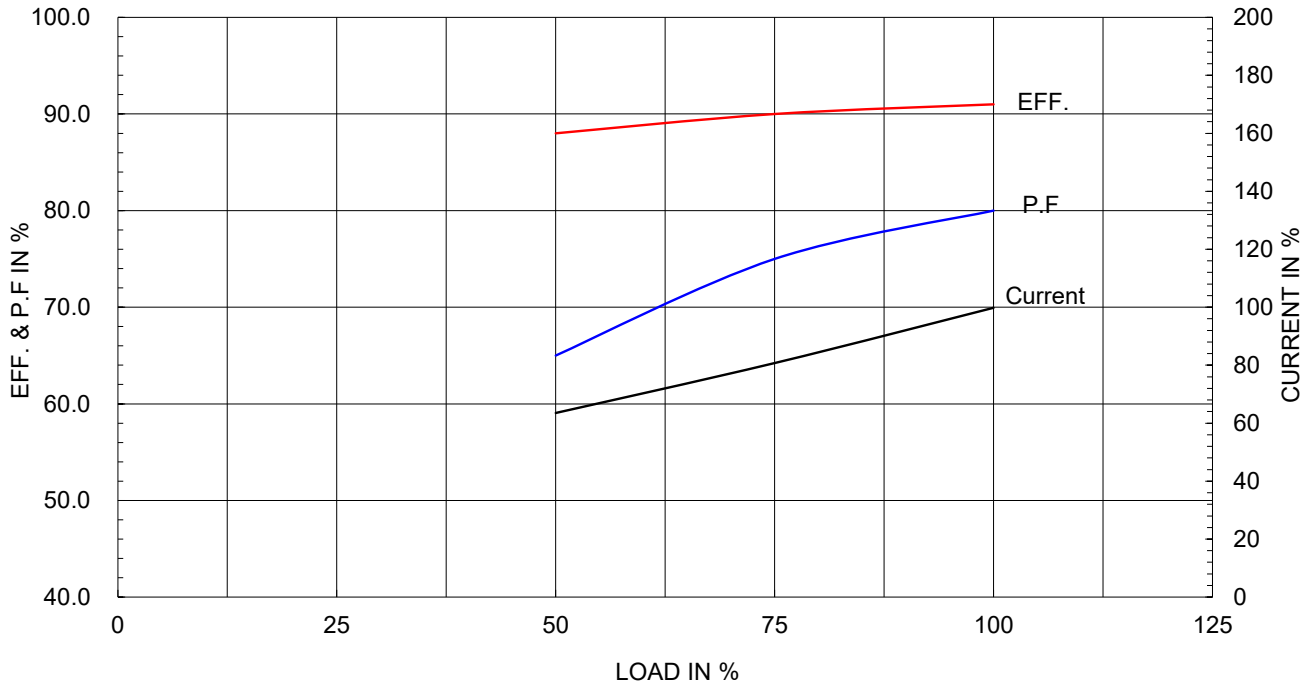

RM-P251-133

A4(210mm x 297mm)

본 문서는 HD현대일렉트릭의 비밀자료로, 무단 열람·사용·복제·배포를 금합니다. 위반 시 관계 법령에 의거 민·형사상 책임을 지게 됩니다.
※ 관계자 외 습득시 보안조직 (052-202-8098, 118@hd.com) 신고

[대외비]

REV	DATE	CONTENTS	REVD BY	CHKD BY	CHKD BY	APPD BY

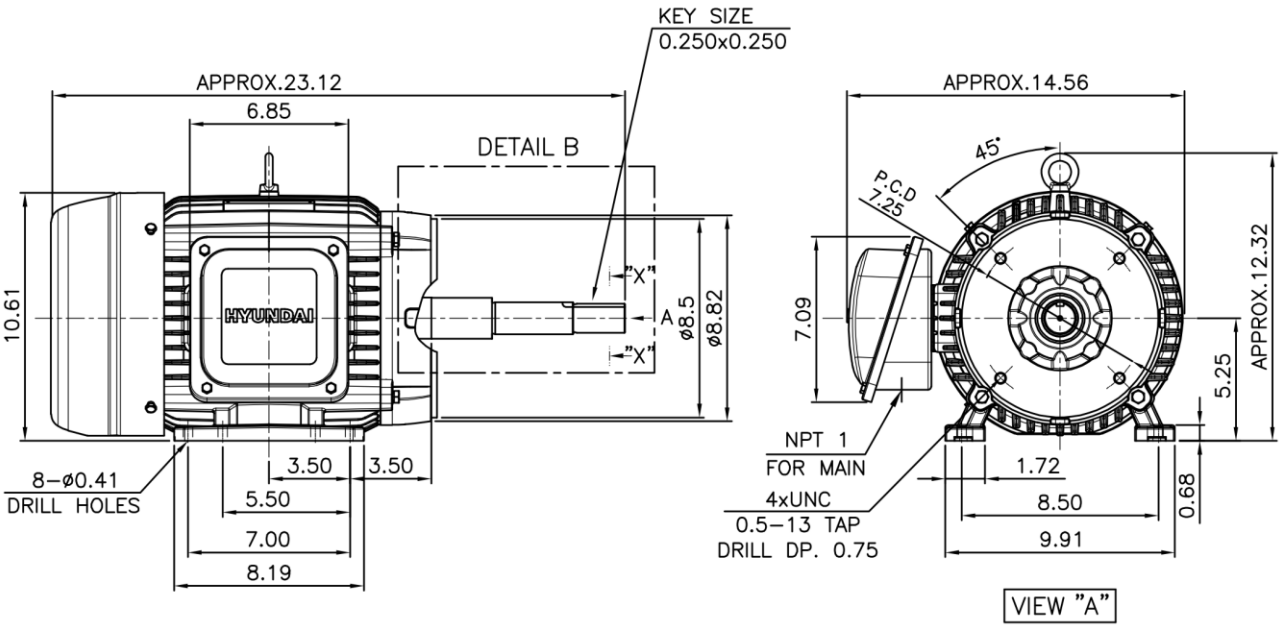

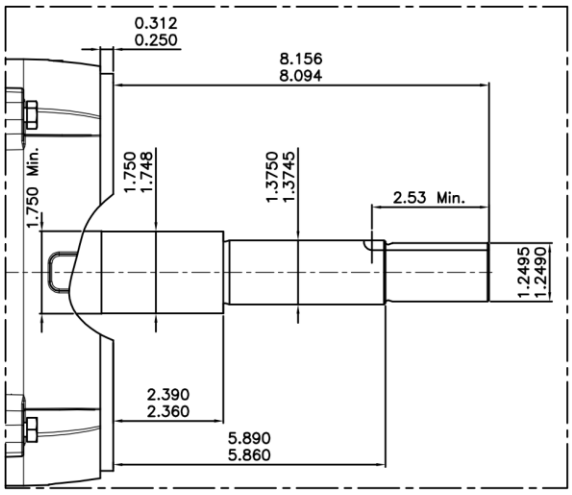

DETAIL – B

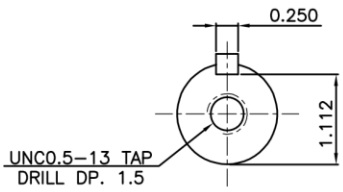

SECTION "X-X"
SCALE 5/8

NOTE

[TOLERANCE]

1. CENTER HEIGHT : +0.00inch – 0.03inch
2. SHAFT DIAMETER : +0.000inch – 0.0005inch
3. KEYWAY DEPTH : +0.000inch – 0.015inch

APPD BY	S.Y.KIM	UNIT	INCH	SUBJECT	NEMA 213/5TC (JP) (Dual hole)	DWG SIZE A4 (1:8)
CHKD BY	I.K.KIM	SCALE	1/8	TITLE	OUTLINE	
CHKD BY		PROJEC'N	3rd Angle			
DSND BY	S.H.LEE	DATE	2025-01-17			
HD HYUNDAI ELECTRIC				REF. NO		Sheet No. of
				DWG NO	LM-T2215C4JLV25	Revision No. 1

THIS DRAWING IS PROPRIETARY TO HYUNDAI ELECTRIC. NO PART OF THIS DRAWING MAYBE REPRODUCED WITHOUT THE PERMISSION OF HYUNDAI ELECTRIC.

본 문서는 HD현대일렉트릭의 비밀자료로, 무단 열람·사용·복제·배포를 금합니다. 위반 시 관계 법령 및 사내 규정에 따라 조치될 수 있습니다.
※ 관계자 외 습득시 보안조직 (052-202-8098, 118@hd.com) 신고

Cls. I&II, Div. 2
IEEE 841

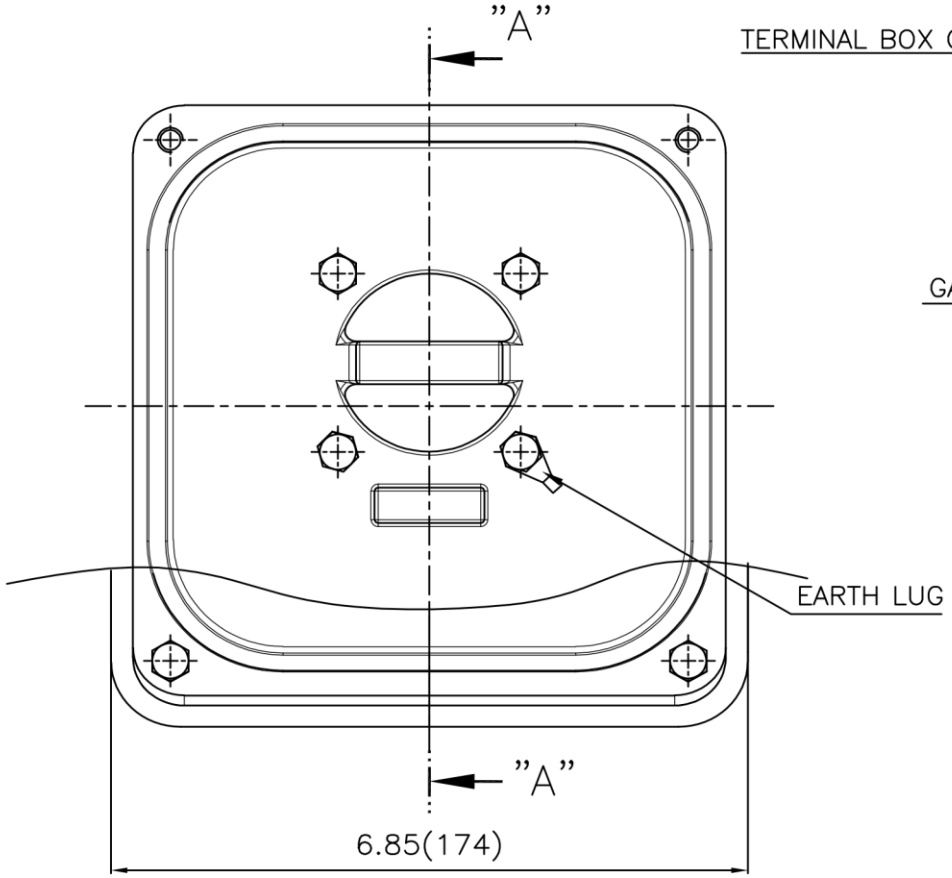

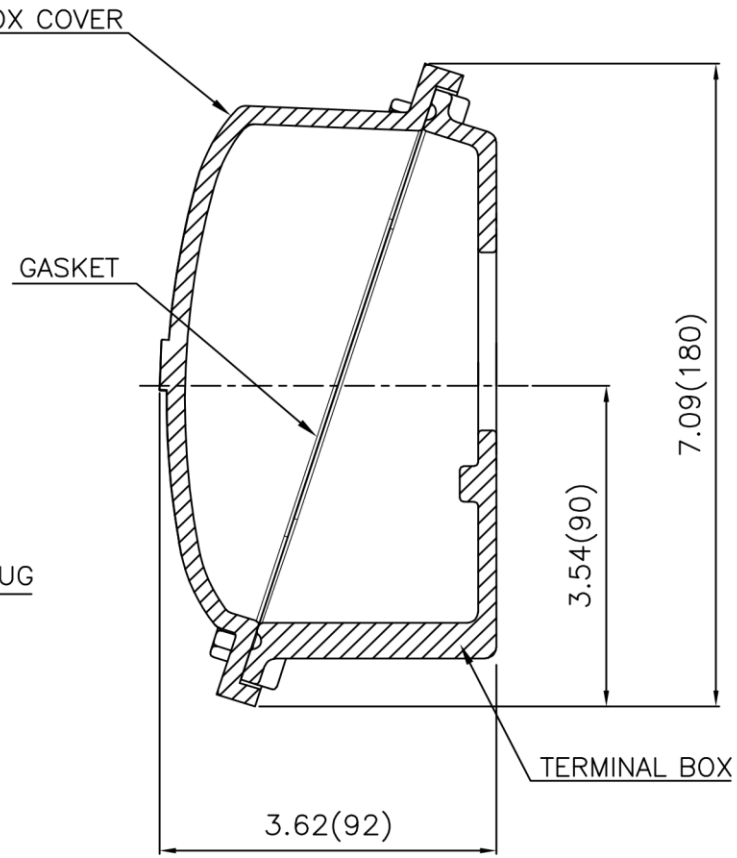

SEC. "A"–"A"

▽	50S
▽▽	12.5S
▽▽▽	3.2S
▽▽▽▽	0.4S

REV	DATE	CONTENTS	REVD BY	CHKD BY	CHKD BY	APPD BY

일반가공공차		일반제관공차	
1–4	±0.1	6–30	±0.5
4–18	±0.2	30–120	±0.8
18–63	±0.3	120–315	±1.2
63–250	±0.5	315–1000	±2.0
250–	±0.8	1000–	±3.0

Q'TY	DESCRIPTION	MATERIAL	DIMENSION	WEIGHT	PART NO.	REMARK	NO.

APPD BY	S.Y.KIM	UNIT	inch(mm)
CHKD BY		SCALE	1/1.5
CHKD BY	R.G.KIM	PROJEC'N	3rd Angle
DSND BY	배슬희	DATE	2023–10–19

SUBJECT: FR. 210 (CAST IRON)

DWG SIZE: A3 (1:1.5)

TITLE: TERMINAL BOX ASS'Y

REF. NO:

Sheet No. of

DWG NO: 3M–248457

Revision No. 0

HD HYUNDAI ELECTRIC

HD HYUNDAI ELECTRIC

본 도면은 HD현대일렉트릭(주) 재산이며 허가없이 복사할 수 없음 (취급유의)

THIS DRAWING IS PROPRIETARY TO HYUNDAI ELECTRIC. NO PART OF THIS DRAWING MAYBE REPRODUCED WITHOUT THE PERMISSION OF HYUNDAI ELECTRIC.

본 문서는 HD현대일렉트릭의 비밀자료로, 무단 열람·사용·복제·배포를 금합니다. 위반 시 관계 법령 및 사내 규정에 따라 조치될 수 있습니다.
※ 관계자 외 습득시 보안조직 (052-202-8098, 118@hd.com) 신고